INSTALLATION & DECLARATION OF CONFORMITY

SAFETY RELAY RY4A

ORIGINAL INSTRUCTIONS

CD288/240111

SMARTSCAN

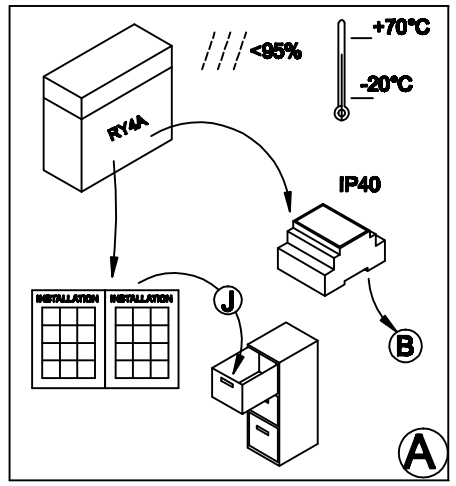

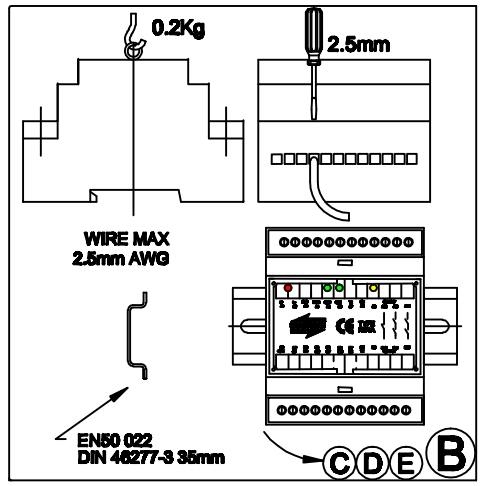

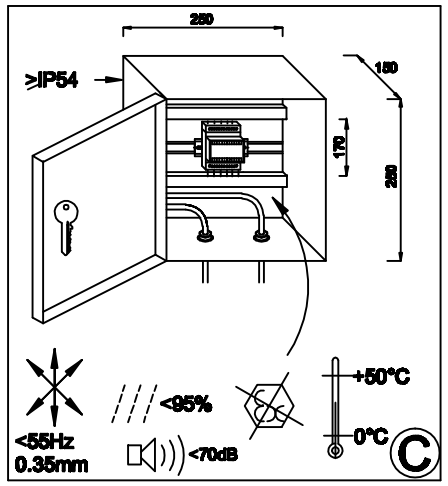

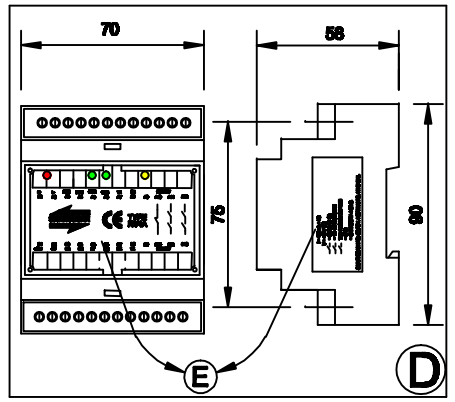

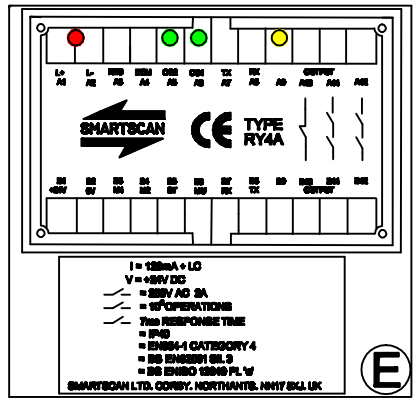

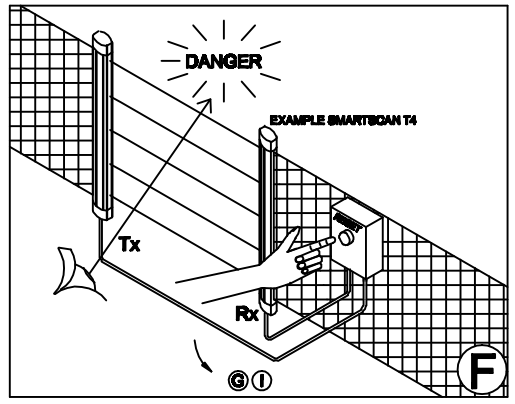

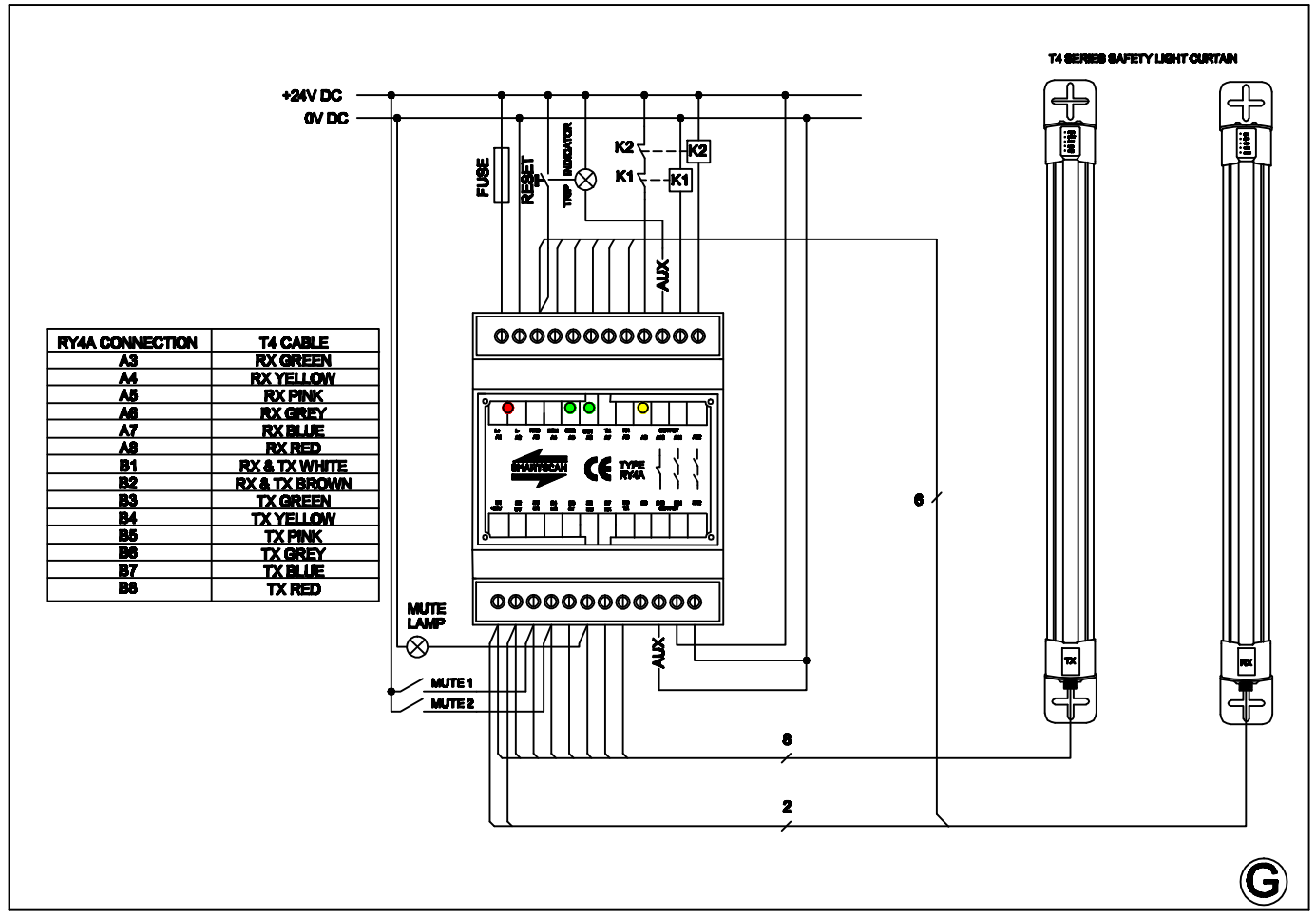

RY4A CONNECTION	T4 CABLE
A3	RX GREEN
A4	RX YELLOW
A5	RX PINK
A6	RX GREY
A7	RX BLUE
A8	RX RED
B1	RX & TX WHITE
B2	RX & TX BROWN
B3	TX GREEN
B4	TX YELLOW
B5	TX PINK
B6	TX GREY
B7	TX BLUE
B8	TX RED

SAFETY OUTPUT CONTACTS

Mechanical life	>10 x 10^6 operations
Switching mechanical frequency	15 Hz
Response time	Typically 8ms
Drop-out time**	Typically 4ms
Bounce time of NO contact	Typically 6ms
Bounce time of NC contact	Typically 12ms
Shock resistance 16ms	NO contact > 10g
Vibration resistance 10-200 Hz	NO contact > 10g
Test voltage coil/contacts	5'000Veff 1 min
Test voltage left to right contact sides	4'000Veff 1 min
Test voltage contacts as one after the other	2'500Veff 1 min
Test voltage contact open	1'500Veff 1 min
Insulation resistance	10^{11} Ω
Creepage resistance	CT 250
Ambient temperature	- 40°C to + 70°C
Pollution degree	2
Overvoltage category	III
Resistance to short circuiting	1'000A SCPD 10A gG (pre-fuse)

** Without spark suppression

Contact lifetime for NO contact

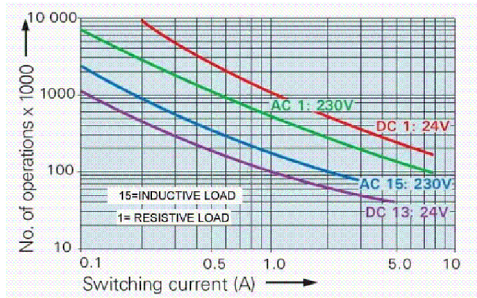

AUXILLARY CONTACTS

Mechanical life	>10 x 10^6 operations
Switching mechanical frequency	15 Hz
Response time	Typically 8ms
Drop-out time**	Typically 4ms
Bounce time of NO contact	Typically 6ms
Bounce time of NC contact	Typically 12ms
Shock resistance 16ms	NO contact > 10g
Vibration resistance 10-200 Hz	NO contact > 10g
Test voltage coil/contacts	5'000Veff 1 min
Test voltage left to right contact sides	4'000Veff 1 min
Test voltage contacts as one after the other	2'500Veff 1 min
Test voltage contact open	1'500Veff 1 min
Insulation resistance	10^{11} Ω
electrical life 24V 2A	1'000'000 operations

H

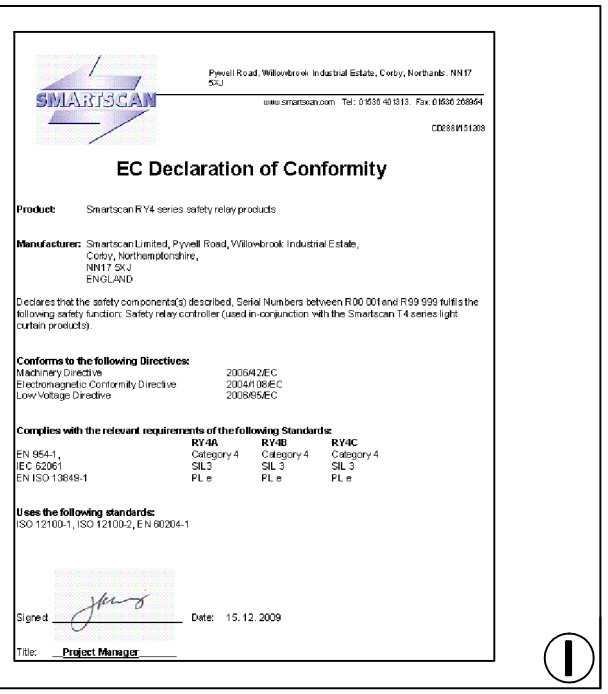

Pywell Road, Willowbrook Industrial Estate, Corby, Northants. NN17 5XJ

www.smartscan.com Tel: 0 536 40 1313. Fax: 0 1536 268864

CD288/151208

EC Declaration of Conformity

Product: Smartscan RY4 series safety relay products

Manufacturer: Smartscan Limited, Pywell Road, Willowbrook Industrial Estate, Corby, Northamptonshire, NN17 5XJ ENGLAND

Declares that the safety components(s) described, Serial Numbers between R00 001 and R99 999 fulfils the following safety function: Safety relay controller (used in conjunction with the Smartscan T4 series light curtain product(s).

Conforms to the following Directives:

Machinery Directive	2006/42/EC
Electromagnetic Conformity Directive	2004/108/EC
Low Voltage Directive	2006/95/EC

Complies with the relevant requirements of the following Standards:

	RY-4A	RY-4B	RY-4C
EN 954-1,	Category 4	Category 4	Category 4
IEC 62061	SIL3	SIL 3	SIL 3
EN ISO 13849-1	PL e	PL e	PL e

Uses the following standards:
ISO 12100-1, ISO 12100-2, EN 60204-1

Signed _____ Date: 15. 12. 2009

Title: Project Manager

I

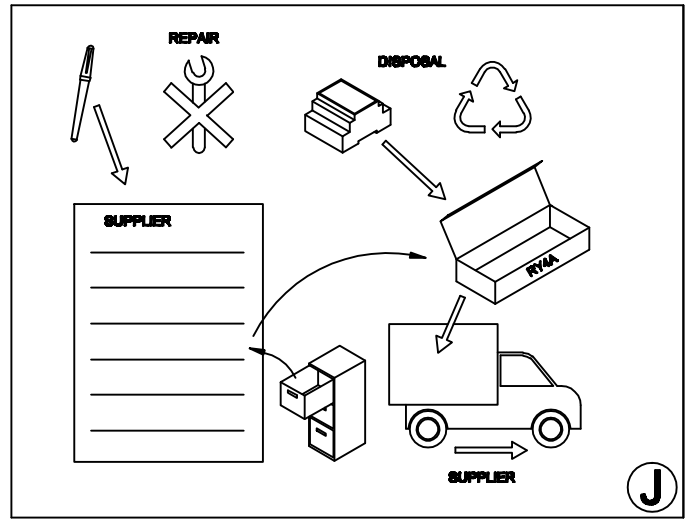

GLOSSARY ENGLISH	GLOSSAIRE FRANCAIS	GLOSSAR DANSK	GLOSSAR DEUTSCHE	BIBLIOGRAPHIE DUTCH	GLOSARIO ESPAGNOL	GLOSSARIO ITALIANO	- NORSK	ORDLISTA SVENSKA
CATEGORY	-	KATEGORI	KATEGORIE	-	CATEGORIA	-	-	KATEGORI
DANGER	DANGER	FARE	GEFAHR	GEVAAR	PELIGRO	PERICOLO	-	FARA
DISPOSAL	DISPOSITION	RÅDGIVNING	BESEITIGUNG	WEG DOEN	DISPOSICION	ELIMINAZIONE	-	SLANG
EXAMPLE	EXAMPLE	EKSEMPEL	BEISPIEL	-	EJEMPLO	-	-	EXEMPEL
FUNCTION	FONCTION	FUNKTION	FUNKTION	FUNCTIE	FUNCION	FUNZIONE	-	FUNKTION
INDICATORS	INDICATEURS	INDIKATION	ANZEIGEN	INDICATORS	INDICADORS	INDICATORI	-	INDIKERINGS
INSTALLATION	INSTALLATION	INSTALLATION	INSTALLATION	INSTALLATIE	INSTALACION	INSTALLAZIONE	-	INSTALLATION
LIGHT CURTAIN	BARRIERE	LYSTÆPPE	LICHTSCHRANKEN	LICHTSCHERM	BAMIER DE SEGURIDAD	BARRIERA OTTICA	-	LJUS BARRIER
MONITORING	SURVEILLANCE	APLIERE	ÜBERWACHUNG	BEWAKING	EL VIGILAR	MONITORAGGIO	-	ÖVERVAKANDE
OPERATIONS	-	OPERATIONS	-	IN BEDRIJFS	-	OPERAZIONES	-	OPERATIONS
OVERRIDE	OVERRIDE	OVERSTYRE	OVERRIDE	OVERRUGGING	OVERRIDE	ESCLUSIONE D'ORDINE	-	MOTTAGARE
REPAIR	REPARENT	REPARERE	REPARATUR	REPAREREN	REPARAR	RIPARARE	-	REPARATION
RESET	-	RESET	RESET	-	-	-	-	ÅTERSTÄLLANS
SAFETY	SURETE	SAFETY	SICHERHEIT	VEILIGHEID	SEGURIZZA	SIGURIZZA	-	SÄKERHET
SAFETY RELAY	RELAIS DE SURETE	-	-	RELAIS VEILIGHEID	-	RELE SIGURIZZA	-	RELÄ SÄKERHET
STATUS	STATUT	STATUS	RANG	STATUS	ESTADO	STATO	-	STATUS
STOP	-	-	-	-	-	-	-	-
SUPPLIER	FOURNISSEUR	LEVERANDØR	LIEFERANT	LEVERANCIER	SUMINTOR	FORNITORE	-	LEVERANTOR

K